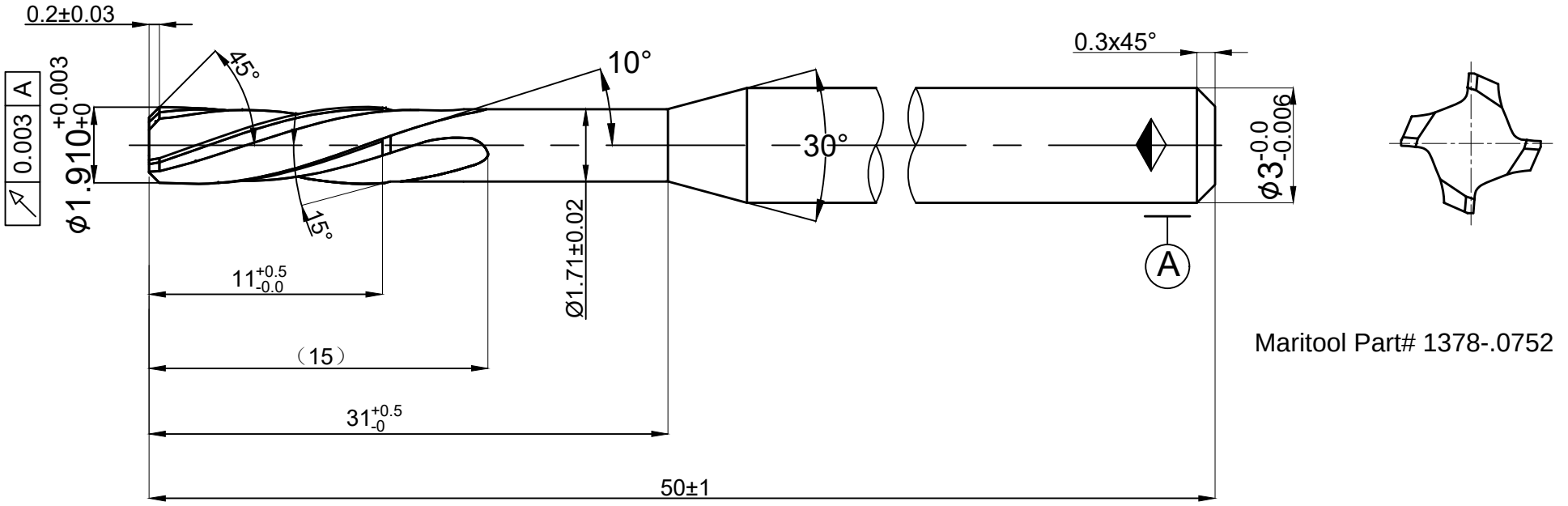

Maritool Part# 1378-.0752